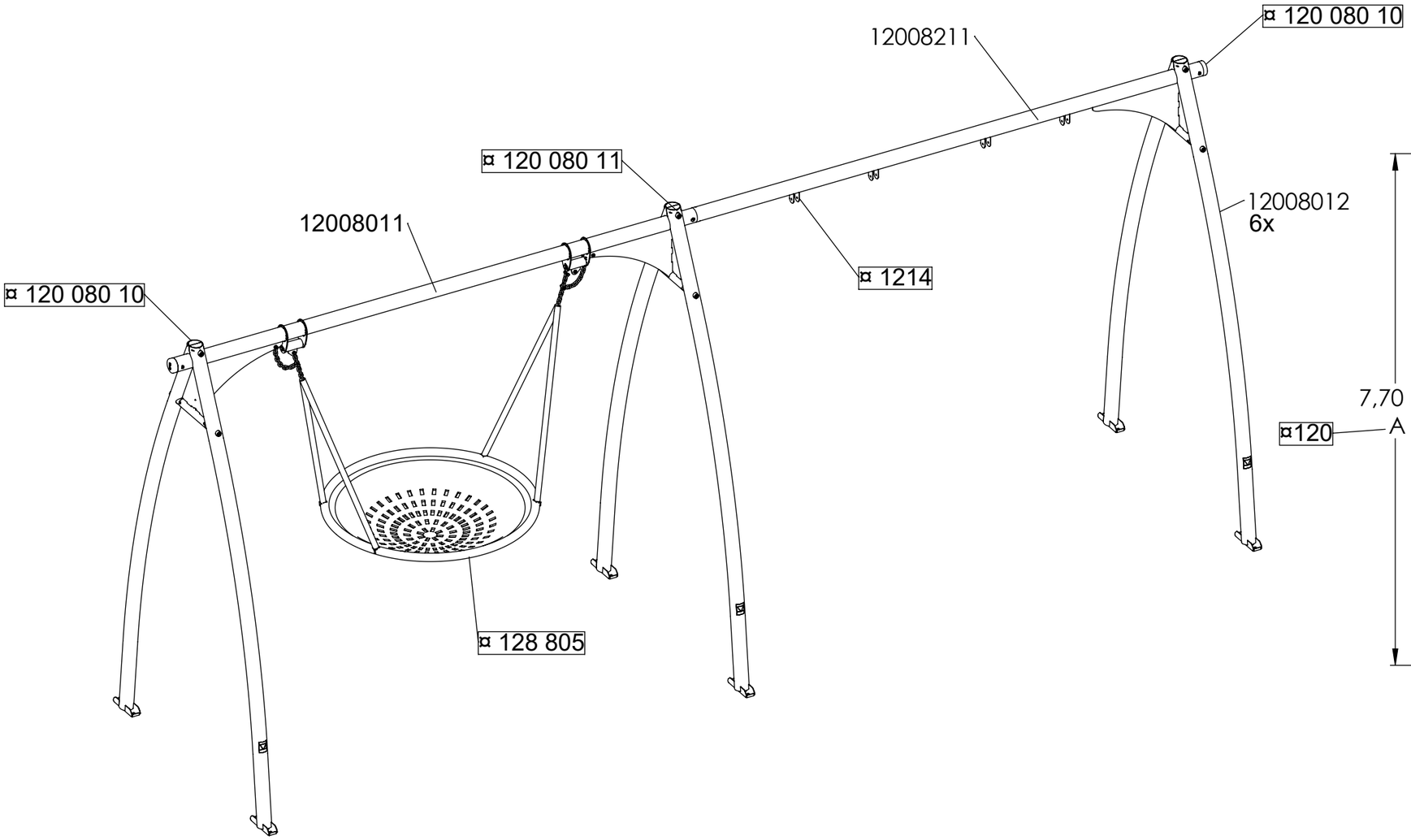

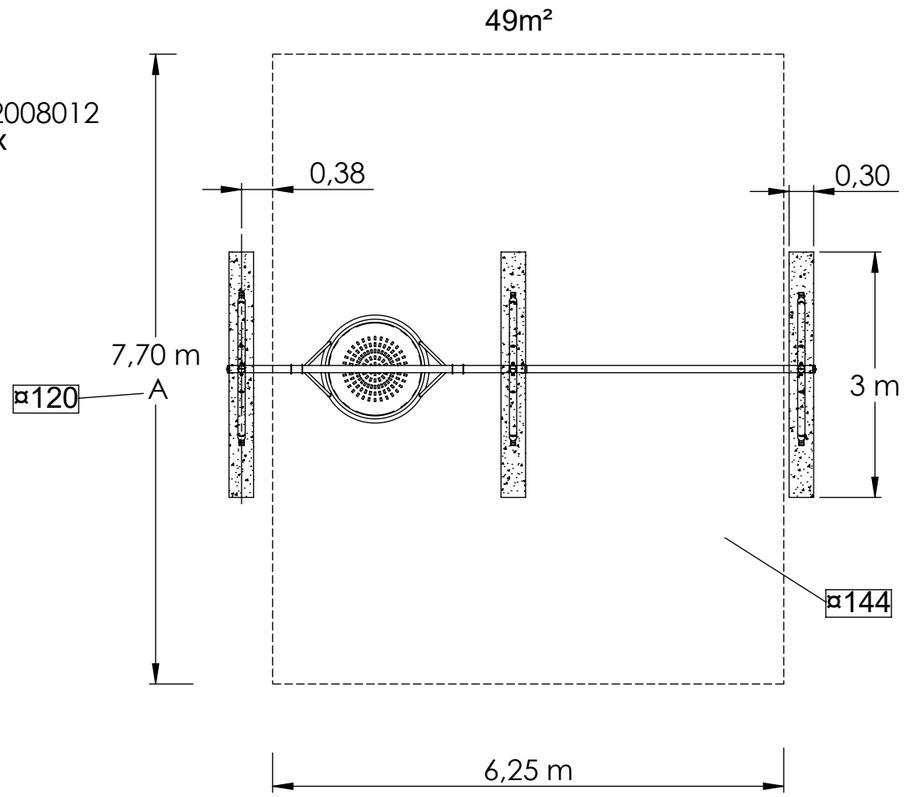

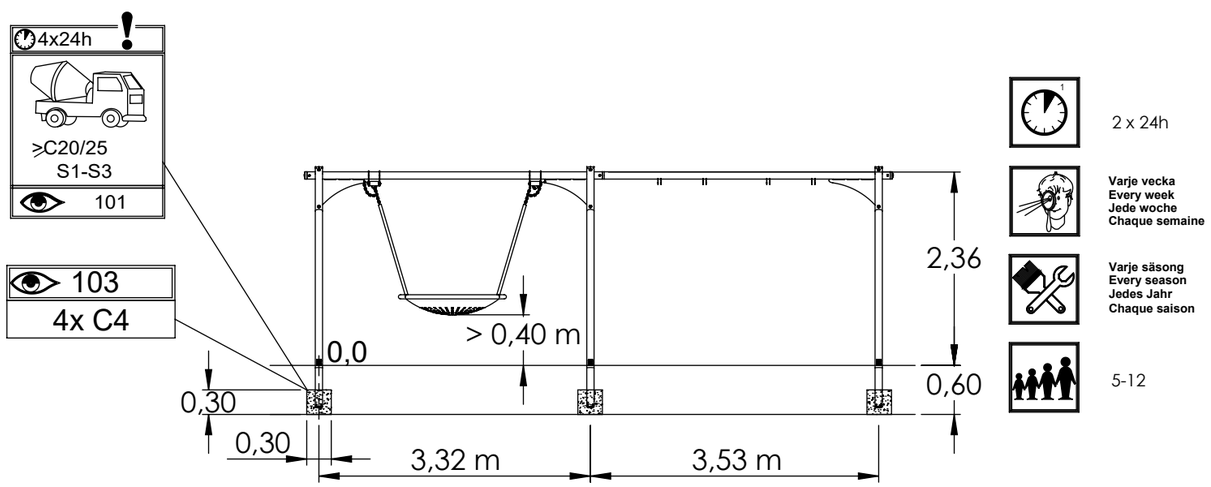

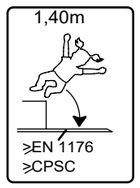

HAGS

HAGS Aneby AB, Box 133, SE-578 23
Aneby, Sweden, Tel: +46 380 473 00,
http://www.hags.com

Stratus

120 082CC

1 (1)

HB		PK	2022-03-03	3