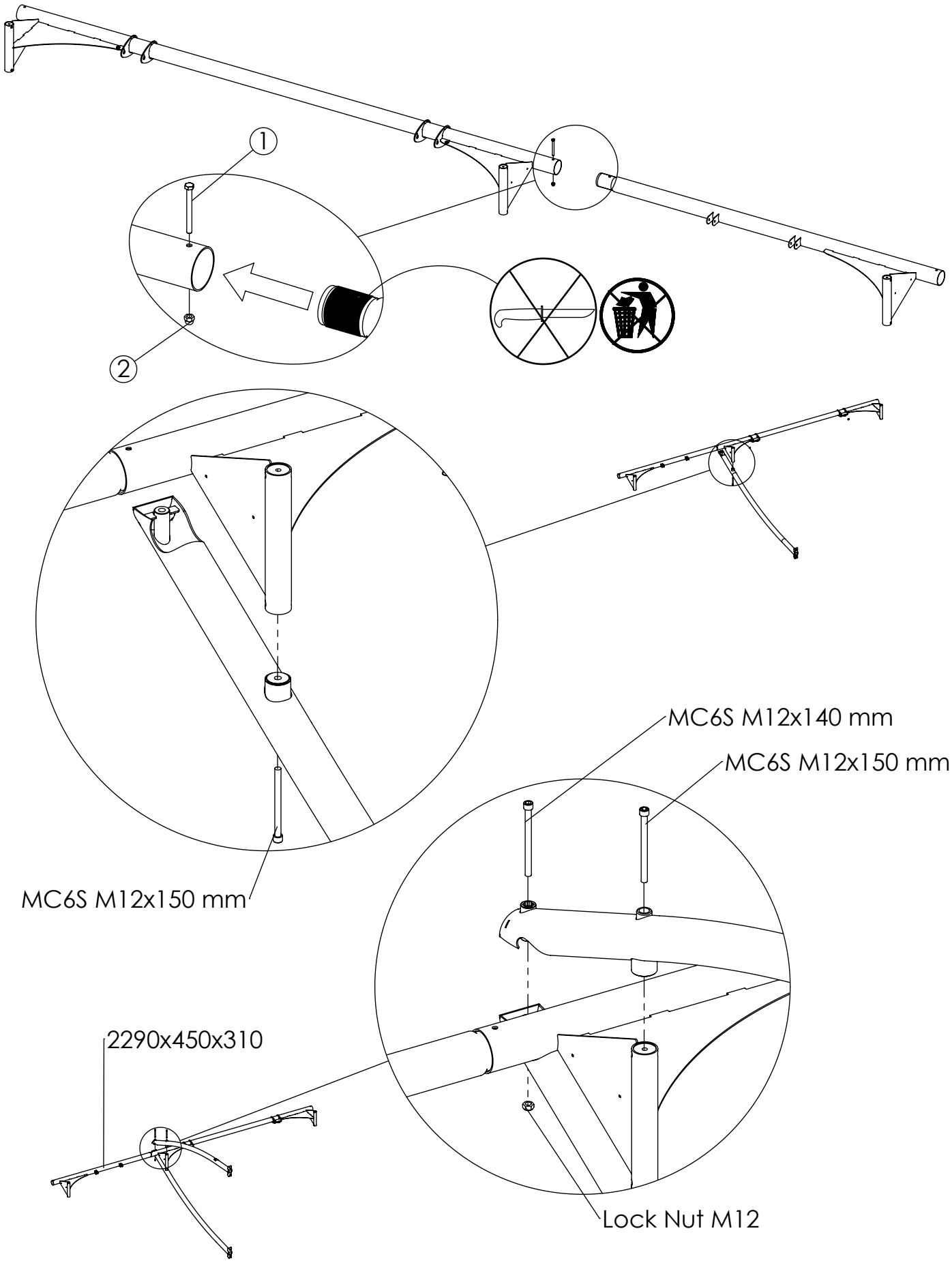

NR.	Description MA	Item Number	QTY
1	M6S M10x100 mm	8008393	1
2	Dome Nut M10	8008754	1

HAGS

ANEBY, SWEDEN
+46(0)380-47300
www.hags.com

Stratus

120 080 11

1 (1)

NN		MM	2022-01-26	2